9/5/00

Town of Riverhead Community Development Agency

Resolution # 22

Authorizes Chairman to Execute License Agreement with Kamco Supply Company

Member COUNCILMAN LULL offered the following resolution,

which was seconded by Member COUNCILMAN DENSIESKI:

WHEREAS, Kamco Supply Company desires to lease the entire UTTAS Building (06-49), 16,000 square feet, at $5 per square foot beginning September 1, 2000 for up to six months; and

WHEREAS, the Town Board desires to encourage additional jobs and revenue to the Town pending closing on the property by the Buyer; and

WHEREAS, this Town Board has balanced such interests and hereby makes the following findings:

1. The proposed license agreements are of short duration;
2. That proposed uses under the license agreements are consistent with the objectives of the Town's Zoning Ordinance;
3. There is a clear mutuality of purpose and goals in this action being that the same elected representatives serve as members of the CDA and the Town Board; and

WHEREAS, the CDA will realize net income of $6,666 per month during the license period.

THEREFORE, BE IT RESOLVED, that the CDA hereby authorizes the Chairman to execute the license agreement substantially in the form attached hereto.

AND BE IT FURTHER RESOLVED, that the License Agreement is to be executed upon issuance of a use permit by the Building Department and site plan approval by the Town Board.

AND BE IT FURTHER RESOLVED, that the Town Clerk shall provide a certified copy of this resolution to Community Development Agency Director Andrea Lohneiss.

The Vote:

Member Densieski	yes
Member Cardinale	yes
Member Kent	yes
Member Lull	yes
Chairman Kozakiewicz	yes

Grubb & Ellis
Property Solutions Worldwide

Memorandum

To: Andrea Lohneiss

Date: August 2, 2000

From: Jack O'Connor
Executive Managing Director

Subject: License Agreement/Kamco

Mr. Alan Svcrdlick has requested a license agreement for the 16,000 SF facility known as UTTAS under the following terms and conditions.

COMPANY:	Kamco Supply Corp. 80 – 21st Street Brooklyn, NY 11232 (718) 768-1234	wholesale building supply.
PRICE PER FOOT:	$5.00	$6666/mo.
TERM:	Six (6) months	
SUBJECT TO:	Building Department approval for outside storage of building materials	(use permit + site plan) 1st.
OCCUPANCY:	September 1, 2000	

Please call so we may discuss this in greater detail.

JOC:jc

File:joclohneiss.ltr

Grubb & Ellis New York, Inc.
95 Broadhollow Road Melville, NY 11747 631.427.1400 631.427.1499, fax

Although all information furnished regarding property for sale, lease or financing is from sources deemed reliable, no representation is made nor is any implied as to the accuracy thereof, and it is submitted subject to errors, omissions, change of price, rental or other conditions, prior sale, lease or financing, or withdrawal without notice. No warranties or representations are made, nor are any implied, as to the condition or construction of the property including any patent or latent conditions, or any hazards contained therein, nor are any implied.

LICENSE

License ("License"), made as of the ___ day of _____, 2000, by and between **the Town of Riverhead Community Development Agency**, having an address at 200 Howell Avenue, Riverhead, NY 11901, Attention: Andrea Lohneiss ("Licensor") and Kamco Supply Company, a corporation having an address at: 80-21st Street, Brooklyn, NY 11232, Attention: Alan Svcrdlick ("Licensee").

W I T N E S S E T H

WHEREAS, Licensor desires to license to Licensee, and Licensee desires to license to Licensor, the right to use approximately 16,000 square feet in Building 06-49 as depicted on Exhibit A (the "License Premises") located at the property formerly known as the Naval Weapons Industrial Reserve Plant, Department of Defense Number 466, Calverton, New York (the "Calverton Site"), upon all of the terms and conditions hereinafter set forth;

NOW, THEREFORE, in consideration of the mutual agreements herein contained, Licensor and Licensee, for themselves, their successors and assigns, hereby agree as follows:

1. **LICENSING.** Upon the terms and conditions hereafter set forth, Licensor hereby licenses to Licensee, and Licensee hereby licenses from Licensor, the right to use the License Premises.

2. **TERM OF LICENSE.** The term of this License (the "Term") shall commence on September 1, 2000 (the "License Commencement Date") and shall end on the earlier of (a) February 28, 20001and (b) the date on which the closing shall occur under that certain Agreement of Sale dated as of June 15, 1999 between Licensor and Calverton Camelot LLC. (in either case, the "Expiration Date") or such earlier date upon which this License shall expire or be canceled or terminated pursuant to any of the conditions or covenants of this License or pursuant to law. Notwithstanding anything to the contrary contained in this License, Licensor shall have the right, exercisable in its sole discretion, to terminate this License effective immediately upon written notice from Licensor to Licensee, if (i) Licensee shall default under or be in breach, of in any of its obligations, representations or warranties hereunder and (ii) such default continues for (x) five days after written notice form Licensor with respect to monetary defaults or (y) thirty days after written notice from Licensor with respect to nonmonetary defaults. If Licensor shall so terminate this License, from and after the termination date neither party hereto shall have any rights or obligations hereunder other than those that, pursuant to the express terms hereof, survive termination of this License; provided that Licensee shall remain liable to Licensor for any default or breach by Licensee that occurred prior to such termination. Furthermore, this License is not, and shall not be construed to be, a lease or a sublease and nothing contained in this License shall be construed as granting to Licensee any interest or right as tenant or subtenant or any other interest or right other than the interest of a Licensee in accordance with the terms and provisions hereof.

3. **CONDITIONS OF LICENSE PREMISES.** Licensee agrees to accept the License Premises "as is," and Licensor shall have no obligation to perform any work or repairs on behalf of Licensee. Licensee acknowledges that no representations with respect to the condition of the License Premises, or with respect to any improvement or fixtures thereon or attached thereto, have been made to it. Licensee shall be responsible for all start-up costs and expenses and for all costs and expenses associated with the operation of the License Premises, including without limitation, utility usage costs. Invoices will be provided to Licensee monthly and re to be paid within 10 days. Specifically, Licensee must install electric and steam meters and incur other start-up costs, including but not limited to reactivation of sprinklers, including quarterly testing as required by the Riverhead Fire Marshall, and reactivation of bathrooms. Licensee is responsible for connection of building to municipal water upon installation of the mains including design, inspection and key money.

4. **SECURITY DEPOSIT.** Licensee shall deposit with Licensor on the date hereof an amount equal to $6,666 as security for the faithful performance and observation by Licensee of the terms, conditions and provisions of this License. If a default shall occur and be continuing hereunder, Licensor may apply or retain the whole or any part of the security so deposited to the extent necessary to cure such default. Upon termination of this License, Licensor shall return to Licensee such deposit, less any amounts to which Licensor is entitled pursuant to the terms hereof.

5. **LICENSE FEE.** Licensee shall pay to Licensor, in accordance with Section 6 hereof (a) on the date hereof an amount equal to $19,998 and (b) on the first business day of each month commencing with December 1, 2000, an amount equal to $6,666 (all of the amounts to be paid by Licensee hereunder, collectively, the "Fee"). In the event that the Term shall terminate on a day other than the last day of a calendar month or in the event that the Term shall terminate prior to November 20, 2000, Licensor and Licensee shall equitably prorate the amount of the Fee actually paid to Licensor for such period.

   Licensee covenants and agrees that in no event shall Licensee permit any motor Vehicle to (1) enter the Calverton Site other than through the Access Point (as defined below) or (2) park anywhere other than in the parking area depicted on Exhibit A attached here (the "Parking Area"). Licensee shall be solely responsible for keeping the Parking Area free and clear of debris and snow.

6. **PAYMENT.** The Fee and all other charges, costs and expenses payable by Licensee under this License shall be paid by certified check payable to the order of the Town of Riverhead Community Development Agency and delivered to Andrea Lohneiss at the address provided for Licensor in the preamble to this License, without notice or demand therefor (except to the extent otherwise expressly provided herein) and without any deduction, credit, set-off, counterclaim or abatement whatsoever in every case in which Licensee is required to pay Licensor a sum of money and said sum (or any portion thereof) is not Paid when due, interest at an annual rate of 12%

shall be payable on such sum (or so much thereof as shall be unpaid) from the date said sum becomes due until the date the unpaid amount is paid.

7. **USE; COVENANTS.** (a) Licensee shall use the License Premises only for the wholesale building supply (the "Uses") to prepare the License Premises for the same and to clean and restore the License Premises, in each case, in accordance with, and subject to, the terms and provisions of this License. Licensee shall be responsible for compliance with local zoning and for obtaining all permits necessary to conduct its business. Specifically, Licensee shall apply for and obtain in a use permit from the Town of Riverhead and site plan approval from the Town Board prior to execution of this agreement. Licensee covenants that no treated lumber is to be stored outside the building.

(b) Licensee, at its own cost and expense, shall protect, maintain, and keep in good order, the License Premises.

(c) No additions to, or alterations of, the License Premises shall be made without the prior consent of Licensor or in violation of any applicable building codes. Upon revocation or surrender of this License, to the extent directed by Licensor, Licensee shall remove all alterations, additions, betterments and improvements made, or installed, and restore the License Premises to the same, or as good condition as existed on the date of entry under this License, reasonable wear and tear excepted.

(d) Licensee shall be liable for any loss of, or damage to, the Calverton Site incurred in connection with the Uses and shall make restoration or repair, or monetary compensation as may be directed by Licensor. Licensee shall maintain, at a minimum, the types and amounts of insurance evidenced by the certificates attached hereto as Exhibit B. Licensee agrees that not less than thirty (30) days prior to the expiration of any insurance required by this License, it will deliver to Licensor's local representative a certificate of insurance or a certified copy of each renewal policy to cover the same risks. Each policy of insurance required hereunder shall name Licensor "Town of Riverhead Community Development Agency" and "Grubb & Ellis Management Services, Inc." as additional insureds. In the event that any items or part of the Calverton Site shall require repair, rebuilding or replacement resulting from loss or damage, the risk of which is assumed under this Section 7, Licensee shall promptly give notice thereof to Licensor and shall, upon demand, either compensate Licensor for such loss or damage, or rebuild, replace or repair the item or items of the Calverton Site so lost or damaged, as Licensor may elect. In the event Licensee shall not have been required to effect such repair, rebuilding, or replacement, and the insurance proceeds allocable to the loss or damage that has created the need for such repair, rebuilding or replacement have been paid to Licensee, Licensee shall promptly refund to Licensor the amount of such proceeds.

(e) Without limiting the generality of any other provision of this Agreement, Licensee hereby covenants and agrees that Licensee shall provide ample vehicles, personnel, equipment and containers to clean the License Premises and insure that the same is

restored to as good condition, subject to reasonable wear and tear, on the Expiration Date as it was in on the License Commencement Date.

(f) In connection with the performance of work under this License, Licensee agrees not to discriminate against any employee or applicant for employment because race, religion, color or national origin. The aforesaid provision shall include, but not be limited to, the following: employment, upgrading, demotion or transfer; recruitment or recruitment advertising; layoff or termination; rates of pay or other forms of compensation; and selection for training including apprenticeship. Licensee agrees to post hereafter in conspicuous places available for employees and applicants for employment, notices to be provided by Licensor setting forth the provisions of the nondiscrimination clause. Licensee further agrees to insert the foregoing in all subcontracts hereunder, except subcontracts for standard commercial supplies or raw materials.

(g) Licensor shall have the sole authority to determine what entity or entities shall provide the following services to the Calverton Site: any and all telecommunications products and services including but not limited to telephone, intellipath, ISDN, date circuits, satellite communications services, fiber, cable, electric and water. Licensee shall not install or contract for the installation of any of the foregoing services without the express written consent of the Licensor.

8. **ASSIGNMENT AND LICENSING.** Notwithstanding anything to the contrary contained in this License, Licensee shall not assign this License, License the License Premises in whole or in part or permit Licensee's interest in this License to be vested in any party other than Licensee by operation f law or otherwise. A transfer of more than fifty (50%) at any one time or, in the aggregate from time to time, of the stock, partnership or other ownership interests in Licensee, direct or indirectly shall be deemed to be an assignment of this License.

9. **LICENSOR'S REMEDIES.** (a) If Licensee fails to perform any of its obligations hereunder in accordance with the terms hereof, then , after reasonable notice to Licensee not to exceed thirty (30) days, and an opportunity for Licensee to cure such failure, (except in case of emergency) License may (but shall not be obligated to) cure such failure at the expense of Licensee, and the amount incurred by Licensor in connection with such cure shall be payable by Licensee to Licensor on demand.

(b) Except as provided in Section 2 and in the immediately following sentence, in the event of a breach by Licensee hereunder, Licensor shall be limited to an action at law for damages. Notwithstanding the foregoing, in the event that Licensee holds over after the expiration of the Term, (i) Licensee shall be obligated to pay Licensor an amount equal to $1,000 per diem for each day of the holdover term and (ii) Licensor shall have all of the rights and remedies available to it at law or in equity, including, without limitation, the right to exercise self help and to dispossess Licensee of the License Premises, change the locks on the License Premises, deny Licensee access to the License Premises and take possession of or dispose of any property at the License

Premises, all at the cost and expense of Licensee. Except as provided in Section 2, in no event shall Licensor have the right to enjoin Licensee's performance of the Uses.

10. **INDEMNITY.** (a) Licensee shall indemnify and hold Licensor harmless from and against any and all claims, actions, liabilities, losses, damages (including, without limitation, consequential and special damages), costs and expenses (including, without limitation, court costs and reasonable attorneys' fees and expenses) arising from or in connection with (i) the use or occupancy by Licensee of the License Premises during the term hereof, or (ii) any work or thing done or any condition created by or any other act or omission of Licensee or its employees, agents, contractors, visitors or licensees, in the License Premises or any other part of the Calverton Site in connection with Licensee's use of the License Premises, or (iii) Licensee's failure to perform any of the obligations imposed on it hereunder.

    (b) The foregoing indemnity does not include any claims, actions, liabilities, losses, damages, costs and expenses resulting from Licensor's gross negligence or willful misconduct.

11. **Brokers.** Licensee represents that it has not dealt with any broker or finder other than Grubb & Ellis with respect to this License. Licensee agrees to indemnify and hold Licensor harmless from and against any and all loss, liability, damage, cost and expense (including, but not limited to, court cots and reasonable attorneys' fees and expenses) which Licensor may incur or sustain in connection with any claim or action by any broker or finder that may be asserted against Licensor as a result of any conversations, correspondence or other dealings between Licensee and such broker or finder.

12. **NOTICES.** Any notices to be given under this License shall be in writing and shall be sent by registered or certified mail, return receipt requested. If such notice is directed to Licensee, it shall be addressed to Licensee at 80-21st, Brooklyn, NY 11232, Attention: Alan Svcrdlick, and if such notice is directed to Licensor, it shall be addressed to Licensor at 200 Howell Avenue, Riverhead, New York 11901, Attention: Andrea Lohneiss. Either party may, by notice in writing, direct that future notices be sent to a different address and to the attention of such other people as either Licensor or Licensee shall designate.

13. **HAZARDOUS SUBSTANCES.** (a) Generally. Licensee shall not generate, store, manufacture, refine, transport, treat, dispose of, or otherwise permit to be present on or about the License Premises, any Hazardous Substances (other than Hazardous Substances (x) customarily used in events such as the Event and (y) used, stored, transported, and disposed of in strict compliance with applicable law). As used herein, the term "Hazardous Substances" shall mean any flammables, explosives, radioactive materials, hazardous wastes, hazardous and toxic substances or related materials, asbestos or any materials containing asbestos, or any other hazardous or toxic substance or material as defined by any Federal, State or local environmental law, rule or regulation, including, without limitation, the Resource Conservation and Recovery Act of 1976, as amended from time to time, the Comprehensive

Environmental Response, Compensation and Liability Act of 1980, as amended from time to time, the Toxic Substances Control Act, as amended from time to time, the Hazardous Materials Transportation Act, as amended from time to time, and the regulations adopted and the publications promulgated pursuant to each of the foregoing.

b. In addition to the foregoing, (A) Licensee hereby agrees to comply at all times with and to cause the License Premises to be in compliance at all times with the Suffolk County Health Department Regulations and (B) Licensee shall file for a fire prevention permit and hazardous material permit from the Town of Riverhead.

c. Indemnification. Licensee shall indemnify and hold harmless Licensor from and against any and all liabilities, damages, claims, losses, penalties, judgments, causes of action, costs and expenses (including, without limitation, court costs and the reasonable fees and expenses of counsel) which may be incurred by Licensor directly arising out of any breach by Licensee of the obligations imposed upon it under this Section 13. The foregoing indemnity shall survive the expiration or sooner termination of this License.

14. **CROSS-DEFAULT.** To the extent that the Licensor and the Licensee are parties to any other similar agreements, any default under such similar agreements shall be deemed to be a default under this License, and any default under such similar agreements.

15. **MISCELLANEOUS**. (a) Merger. All prior understandings and agreements between the parties with respect to the subject matter hereof are merged within this License, which alone fully and completely sets forth the understanding of the parties with respect to the subject matter hereof. This License may not be changed or terminated orally or in any manner other than by a writing signed by the party against whom enforcement of the change or termination is sought.

(b) Successors and Assigns. This License shall be binding upon and shall inure to the benefit of the parties hereto and their respective successors and permitted assigns. The term "Licensor," as used in this License, shall mean only the owner from time to time of the License Premises, so that in the event of any transfer or assignment of the License Premises, the transferor or assignor shall be and hereby is entirely freed and relieved of all covenants, obligations and liability of Licensor under this License, and it shall be deemed, without further agreement, that the transferee or assignee has assumed and agreed to perform and observe all obligations of Licensor under this License during the period that such transferee or assignee is the owner of the interest of License Premises.

(c) Licensee represents that this License has been duly authorized, executed and delivered by Licensee and is enforceable against Licensee in accordance with its terms.

(d) Neither Licensor nor any tenant, nor other party now or hereafter having an interest in the Calverton Site, shall have any right of action based upon invasion of privacy, publicity, defamation, or other civil rights, in connection with the exercise of the permission and/or rights herein granted. Notwithstanding the foregoing, Licensee shall not use the name "Calverton" or "Riverhead", or any signage containing such names, and shall not use the names, pictures, or likenesses of any officials or employees of the Town of Riverhead in connection with or production of the "use" hereunder without the prior consent of Licensor, which consent shall not be unreasonably withheld or delayed.

LICENSOR:

THE TOWN OF RIVERHEAD COMMUNITY DEVELOPMENT AGENCY

By:_____
Name:
Title:

LICENSEE:

By:_____
Name:
Title:

9/5/00

Town of Riverhead Community Development Agency

Resolution # 23

Authorizes Chairman to Execute License Agreement with Rapport Global Ent. for Use of a Portion of the Calverton Facility for Musical Rehearsal

Member COUNCILMAN KENT offered the following resolution,

which was seconded by Member COUNCILMAN CARDINALE:

WHEREAS, Rapport Global Ent. has requested a license agreement for a portion of Plant 6 for the purposes of a musical performance rehearsal on September 20 and 21, 2000; and

WHEREAS, the CDA will realize net income of $4,000 for the license period.

THEREFORE, BE IT RESOLVED, that the CDA hereby authorizes the Chairman to execute the license agreement substantially in the form attached hereto.

AND BE IT FURTHER RESOLVED, that the Town Clerk shall provide a certified copy of this resolution to Community Development Agency Director Andrea Lohneiss.

The Vote:

Member Densieski Yes
Member Cardinale Yes
Member Kent Yes
Member Lull Yes
Chairman Kozakiewicz Yes

DRAFT

LICENSE

LICENSE ("License"), made as of the ____ day of August, 2000, by and between **THE TOWN OF RIVERHEAD COMMUNITY DEVELOPMENT AGENCY**, having an address at 200 Howell Avenue, Riverhead, New York 11901, Attention: Andrea Lohneiss ("Licensor"), and **RAPPORT GLOBAL ENT.**, a corporation having an address at c/o Variety Ent., 180 Centennial Avenue, Pascataway NJ, 08854 Attention: Deepak Gattani ("Licensee").

W I T N E S S E T H:

WHEREAS, Licensor desires to license to Licensee, and Licensee desires to license from Licensor, the right to use a portion building #06-01 (the "License Premises") located at the property formerly known as the Naval Weapons Industrial Reserve Plant, Department of Defense Number 466, Calverton, New York (the "Calverton Site"), upon all of the terms and conditions hereinafter set forth;

NOW, THEREFORE, in consideration of the mutual agreements herein contained, Licensor and Licensee, for themselves, their successors and assigns, hereby agree as follows:

1. **LICENSING**. Upon the terms and conditions hereinafter set forth, Licensor hereby licenses to Licensee, and Licensee hereby Licenses from Licensor, the right to use the License Premises.

2. **TERM OF LICENSE**. The term of this License (the "Term") shall commence on September 20, 2000 at 12:01 a.m. (the "License Commencement Date") and shall end on September 21, 2000 at 11:59 p.m. (the "Expiration Date") or on such earlier date upon which this License shall expire or be canceled or terminated pursuant to any of the conditions or covenants of this License or pursuant to law. Notwithstanding anything to the contrary contained in this License, Licensor shall have the right, exercisable in its sole discretion, to terminate this License effective immediately upon written notice from Licensor to Licensee, if (i) Licensee shall default under or be in breach, of in any of its obligations, representations or warranties hereunder and (ii) such default continues for (x) five days after written notice from Licensor with respect to monetary defaults or (y) thirty days after written notice from Licensor with respect to nonmonetary defaults. If Licensor shall so terminate this License, from and after the termination date neither party hereto shall have any rights or obligations hereunder other than those that, pursuant to the express terms hereof, survive termination of this License; provided that Licensee shall remain liable to Licensor for any default or breach by Licensee that occurred prior to such termination. Furthermore, this License is not, and shall not be construed to be, a lease or a sublease and nothing contained in this License shall be construed as granting to Licensee any interest or right as tenant or subtenant or any other interest or right other than the interest of a Licensee in accordance with the terms and provisions hereof.

3. **CONDITION OF LICENSE PREMISES**. Licensee agrees to accept the License Premises "as is," and Licensor shall have no obligation to perform any work or repairs on behalf of Licensee. Licensee acknowledges that no representations with respect to the

condition of the License Premises, or with respect to any improvements or fixtures thereon or attached thereto, have been made to it.

4. **LICENSE FEE**. Simultaneously with the execution hereof, Licensee shall pay to Licensor a fee in the amount of $4,000.00 (the "Fee"), which Fee consists of a per diem amount of $2,000.00 for each day of the Term.

Licensee covenants and agrees that (i) in no event shall Licensee permit any motor vehicle to (1) enter the Calverton Site other than through the Access Point (as defined below) or (2) park anywhere other than the Parking Area and (ii) a representative of Licensee shall be present at the Access Point at all times during the Event. Licensee further covenants and agrees not to permit any person that is not in a motor vehicle to enter the Calverton Site. Notwithstanding the foregoing, Licensee shall be permitted to admit pedestrians into the Calverton Site to the extent necessary to ensure the safety of such pedestrians.

5. **PAYMENT**. The Fee and all other charges, costs and expenses payable by Licensee under this License shall be paid by certified check made payable to the order of The Town of Riverhead Community Development Agency and delivered to Andrea Lohneiss at the address provided for Licensor in the preamble to this License, without notice or demand therefor (except to the extent otherwise expressly provided herein) and without any deduction, credit, set-off, counterclaim or abatement whatsoever before September 15. In every case in which Licensee is required to pay to Licensor a sum of money and said sum (or any portion thereof) is not paid when due, interest at an annual rate of 12% shall be payable on such sum (or so much thereof as shall be unpaid) from the date said sum becomes due until the date the unpaid amount is paid.

6. **USE; COVENANTS**. (a) Licensee shall use the License Premises only for rehearsing for a rock concert from September 20, 2000 through September 21, 2000 (the "Event"), to prepare the License Premises for the same and to clean and restore the License Premises, in each case, in accordance with, and subject to, the terms and provisions of this License.

(b) Licensee, at its own cost and expense, shall protect, maintain, and keep in good order, the License Premises.

(c) No additions to, or alterations of, the License Premises shall be made without the prior consent of Licensor. Upon revocation or surrender of this License, to the extent directed by Licensor, Licensee shall remove all alterations, additions, betterments and improvements made, or installed, and restore the License Premises to the same, or as good condition as existed on the date of entry under this License, reasonable wear and tear excepted.

(d) Licensee shall be liable for any loss of, or damage to, the Calverton Site incurred in connection with the Event and shall make such restoration or repair, or monetary compensation as may be directed by Licensor. Licensee shall maintain, at a minimum, the types and amounts of insurance evidenced by the certificates attached hereto as Exhibit A. Licensee agrees that not less than thirty (30) days prior to the expiration of any insurance required by this License, it will deliver to Licensor's local representative a certificate of insurance or a certified copy of each

renewal policy to cover the same risks. Each policy of insurance required hereunder shall name Licensor, "CDA" and "Grubb & Ellis Management Services, Inc." as additional insureds. In the event that any item or part of the Calverton Site shall require repair, rebuilding or replacement resulting from loss or damage, the risk of which is assumed under this Section 6, Licensee shall promptly give notice thereof to Licensor and shall, upon demand, either compensate Licensor for such loss or damage, or rebuild, replace or repair the item or items of the Calverton Site so lost or damaged, as Licensor may elect. In the event Licensee shall not have been required to effect such repair, rebuilding, or replacement, and the insurance proceeds allocable to the loss or damage which has created the need for such repair, rebuilding or replacement have been paid to Licensee, Licensee shall promptly refund to Licensor the amount of such proceeds.

(e) Without limiting the generality of any other provision of this Agreement, Licensee hereby covenants and agrees that (i) at all times during the Term, adequate private security shall be present at the Calverton Site to protect persons and property at the Calverton Site, (ii) only the gate at the south end of the Calverton Site (the "Access Point") shall be used for access, (iii) Licensee shall prohibit any person from smoking, or carrying, using or drinking any alcoholic beverage or illegal substance, at the Calverton Site and adequate signage stating that smoking and carrying, using or drinking alcoholic beverages or illegal substances is prohibited at the Calverton Site shall be posted at the Access Point and (iv) Licensee shall provide ample vehicles, personnel, equipment and containers to clean the License Premises and insure that the same is restored to as good condition, subject to reasonable wear and tear, on the Expiration Date as it was in on the License Commencement Date.

(f) In connection with the performance of work under this License, Licensee agrees not to discriminate against any employee or applicant for employment because of race, religion, color, or national origin. The aforesaid provision shall include, but not be limited to, the following: employment, upgrading, demotion, or transfer; recruitment or recruitment advertising; layoff or termination; rates of pay or other forms of compensation; and selection for training, including apprenticeship. Licensee agrees to post hereafter in conspicuous places available for employees and applicants for employment, notices to be provided by Licensor setting forth the provisions of the nondiscrimination clause. Licensee further agrees to insert the foregoing provision in all subcontracts hereunder, except subcontracts for standard commercial supplies or raw materials.

7. **ASSIGNMENT AND LICENSING**. Notwithstanding anything to the contrary contained in this License, Licensee shall not assign this License, License the License Premises in whole or in part or permit Licensee's interest in this License to be vested in any party other than Licensee by operation of law or otherwise. A transfer of more than fifty (50%) percent at any one time or, in the aggregate from time to time, of the stock, partnership or other ownership interests in Licensee, direct or indirectly, shall be deemed to be an assignment of this License.

8. **LICENSOR'S REMEDIES**. (a) If Licensee fails to perform any of its obligations hereunder in accordance with the terms hereof, then, after reasonable notice to Licensee not to exceed thirty (30) days, and an opportunity for Licensee to cure such failure, (except in case of emergency) Licensor may (but shall not be obligated to) cure such failure at the expense of Licensee, and the amount incurred by Licensor in connection with such cure shall be payable by Licensee to Licensor on demand.

(b) Except as provided in Paragraph 2 and in the immediately following sentence, in the event of a breach by Licensee hereunder, Licensor shall be limited to an action at law for damages. Notwithstanding the foregoing, in the event that Licensee holds over after the expiration of the Term, (i) Licensee shall be obligated to pay Licensor an amount equal to $1,500 per diem for each day of the holdover term and (ii) Licensor shall have all of the rights and remedies available to it at law or in equity, including, without limitation, the right to exercise self help and to dispossess Licensee of the License Premises, change the locks on the License Premises, deny Licensee access to the License Premises and take possession of or dispose of any property at the License Premises, all at the cost and expense of Licensee. Except as provided in Paragraph 2, in no event shall Licensor have the right to enjoin the development, production, distribution or exploitation of the rock concert rehearsal hereunder.

9. **INDEMNITY**. (a) Licensee shall indemnify and hold Licensor harmless from and against any and all claims, actions, liabilities, losses, damages (including, without limitation, consequential and special damages), costs and expenses (including, without limitation, court costs and reasonable attorneys' fees and expenses) arising from or in connection with (i) the use or occupancy by Licensee of the License Premises during the term hereof, or (ii) any work or thing done or any condition created by or any other act or omission of Licensee or its employees, agents, contractors, visitors or licensees, in the License Premises or any other part of the Calverton Site in connection with Licensee's use of the License Premises, or (iii) Licensee's failure to perform any of the obligations imposed on it hereunder.

(b) The foregoing indemnity does not include any claims, actions, liabilities, losses, damages, costs and expenses resulting from Licensor's gross negligence or willful misconduct.

10. **BROKERS**. Licensee represents that it has not dealt with any broker or finder with respect to this License. Licensee agrees to indemnify and hold Licensor harmless from and against any and all loss, liability, damage, cost and expense (including, but not limited to, court costs and reasonable attorneys' fees and expenses) which Licensor may incur or sustain in connection with any claim or action by any broker or finder that may be asserted against Licensor as a result of any conversations, correspondence or other dealings between Licensee and such broker or finder.

11. **NOTICES**. Any notices to be given under this License shall be in writing and shall be sent by registered or certified mail, return receipt requested. If such notice is directed to Licensee, it shall be addressed to Licensee at **RAPPORT GLOBAL ENT.**, a corporation having an address at c/o Variety Ent., 180 Centennial Avenue, Pascataway NJ, 08854 Attention: Deepak Gattani, and if such notice is directed to Licensor, it shall be addressed to Licensor at 200 Howell Avenue, Riverhead, New York 11901, Attention: Andrea Lohneiss. Either party may, by notice in writing, direct that future notices be sent to a different address and to the attention of such other people as either Licensor or Licensee shall designate.

12. **HAZARDOUS SUBSTANCES**. (a) Generally. Licensee shall not generate, store, manufacture, refine, transport, treat, dispose of, or otherwise permit to be present on or about the License Premises, any Hazardous Substances (other than Hazardous Substances (x) customarily used in events such as the Event and (y) used, stored, transported, and disposed of in strict compliance with applicable law). As used herein, the term "Hazardous Substances" shall

mean any flammables, explosives, radioactive materials, hazardous wastes, hazardous and toxic substances or related materials, asbestos or any materials containing asbestos, or any other hazardous or toxic substance or material as defined by any Federal, State or local environmental law, rule or regulation, including, without limitation, the Resource Conservation and Recovery Act of 1976, as amended from time to time, the Comprehensive Environmental Response, Compensation and Liability Act of 1980, as amended from time to time, the Toxic Substances Control Act, as amended from time to time, the Hazardous Materials Transportation Act, as amended from time to time, and the regulations adopted and the publications promulgated pursuant to each of the foregoing. Notwithstanding the foregoing, Licensee shall be permitted to stage fires and the like subject to Licensee obtaining the necessary permits including, without limitation, permits from the Riverhead fire department.

(b) Indemnification. Licensee shall indemnify and hold harmless Licensor from and against any and all liabilities, damages, claims, losses, penalties, judgments, causes of action, costs and expenses (including, without limitation, court costs and the reasonable fees and expenses of counsel) which may be incurred by Licensor directly arising out of any breach by Licensee of the obligations imposed upon it under this Section 12. The foregoing indemnity shall survive the expiration or sooner termination of this License.

13. **MISCELLANEOUS**. (a) Merger. All prior understandings and agreements between the parties with respect to the subject matter hereof are merged within this License, which alone fully and completely sets forth the understanding of the parties with respect to the subject matter hereof. This License may not be changed or terminated orally or in any manner other than by a writing signed by the party against whom enforcement of the change or termination is sought.

(b) Successors and Assigns. This License shall be binding upon and shall inure to the benefit of the parties hereto and their respective successors and permitted assigns. The term "Licensor," as used in this License, shall mean only the owner from time to time of the License Premises, so that in the event of any transfer or assignment of the License Premises, the transferor or assignor shall be and hereby is entirely freed and relieved of all covenants, obligations and liability of Licensor under this License, and it shall be deemed, without further agreement, that the transferee or assignee has assumed and agreed to perform and observe all obligations of Licensor under this License during the period that such transferee or assignee is the owner of the interest of License Premises.

(c) Licensee represents that this License has been duly authorized, executed and delivered by Licensee and is enforceable against Licensee in accordance with its terms.

(d) Licensee shall own all rights of every kind associated with the music performed hereunder and any and all photography and/or recordings made hereunder, including the right to utilize the same in connection with the rock concert rehearsal and in connection with any other productions, in any manner whatsoever, whether now known or hereafter devised in perpetuity and throughout the universe.

(e) Neither Licensor nor any tenant, nor other party now or hereafter having an interest in the Calverton Site, shall have any right of action based upon invasion of privacy, publicity,

defamation, or other civil rights, in connection with the exercise of the permission and/or rights herein granted. Notwithstanding the foregoing, Licensee shall not use the name "Calverton" or "Riverhead", or any signage containing such names, and shall not use the names, pictures, or likenesses of any officials or employees of the Town of Riverhead in connection with or production of the rock concert rehearsal hereunder without the prior consent of Licensor, which consent shall not be unreasonably withheld or delayed.

IN WITNESS WHEREOF, Licensor and Licensee do hereby execute this License as of the date and year first above written.

LICENSOR:

THE TOWN OF RIVERHEAD COMMUNITY DEVELOPMENT AGENCY

By:_____
Name:
Title:

LICENSEE:

RAPPORT GLOBAL ENT.,

By:_____
Name:
Title:

9/5/00

COMMUNITY DEVELOPMENT AGENCY
RESOLUTION # 24

AMENDS CDA RESOLUTION #20

COUNCILMAN LULL offered the following resolution, which was seconded by COUNCILMAN CARDINALE.

WHEREAS, Resolution #20, adopted on July 18, 2000, authorized the execution of a License Agreement with Island Properties of Suffolk, Inc. for the entire 14,107 square foot Building 06-13; and

WHEREAS, said License Agreement has not yet been executed; and

WHEREAS, the Licensee has requested an amendment to authorize execution of a License Agreement with Michael Reilly Design, Inc., beginning September 1, 2000 for up to six months at a fee of $5.00 per square foot ($5,878 per month).

THEREFORE, BE IT RESOLVED, that the CDA Board authorizes the Chairman to execute a License Agreement substantially in the form attached hereto with Michael Reilly Design, Inc.

BE IT FURTHER RESOLVED, that the Town Clerk shall provide a certified copy of this resolution to Andrea Lohneiss, CDA Director.

5 yes

7/18/00

Town of Riverhead Community Development Agency

Resolution # 20

Authorizes Chairman to Execute License Agreement with Island Properties of Suffolk, Inc.

Member Densieski offered the following resolution,

which was seconded by Member Cardinale:

WHEREAS, on March 21, 2000, by CDA Resolution #7, the CDA approved a license agreement for Michael Reilly Design for use of 5,400 square feet of Building 06-13; and

WHEREAS, the Licensee, Michael Reilly Design, did not execute said License Agreement; and

WHEREAS, Island Properties of Suffolk, Inc. desires to lease the entire building, 14,107 square feet, at $5 per square foot beginning August 1, 2000 for up to six months; and

WHEREAS, the Town Board desires to encourage additional jobs and revenue to the Town pending closing on the property by the Buyer; and

WHEREAS, this Town Board has balanced such interests and hereby makes the following findings:

1. The proposed license agreements are of short duration;
2. That proposed uses under the license agreements are consistent with the objectives of the Town's Zoning Ordinance;
3. There is a clear mutuality of purpose and goals in this action being that the same elected representatives serve as members of the CDA and the Town Board; and

WHEREAS, the CDA will realize net income of $5,878 per month during the license period.

THEREFORE, BE IT RESOLVED, that the CDA hereby authorizes the Chairman to execute the license agreement substantially in the form attached hereto.

AND BE IT FURTHER RESOLVED, that the Town Clerk shall provide a certified copy of this resolution to Community Development Agency Director Andrea Lohneiss.

The Vote:

YES

State of New York)
County of Suffolk) ss:
Town of Riverhead

THIS IS TO CERTIFY that I, the undersigned, Secretary/Treasurer of the Riverhead Community Development Agency, Town of Riverhead, County of Suffolk, have compared the foregoing copy with the original now on file in this office and which was duly filed on the 21st day of July 2000, and that the same is a true and correct transcript of said and of the whole thereof.

IN WITNESS WHEREOF, I have hereunto set my hand and the official seal of the said Riverhead Community Development Agency, this 21st day of July 2000.

Secretary/Treasurer of the C

Island Properties of Suffolk, Inc.

LICENSE

License ("License"), made as of the ___ day of July, 2000, by and between **the Town of Riverhead Community Development Agency**, having an address at 200 Howell Avenue, Riverhead, NY 11901, Attention: Andrea Lohneiss ("Licensor") and [redacted] MRD [redacted], a corporation having an address at: [redacted] Attention: [redacted], President ("Licensee").
mRilly

W I T N E S S E T H

WHEREAS, Licensor desires to license to Licensee, and Licensee desires to license to Licensor, the right to use approximately 14,107 square feet in Building 06-13 as depicted on Exhibit A (the "License Premises") located at the property formerly known as the Naval Weapons Industrial Reserve Plant, Department of Defense Number 466, Calverton, New York (the "Calverton Site"), upon all of the terms and conditions hereinafter set forth;

NOW, THEREFORE, in consideration of the mutual agreements herein contained, Licensor and Licensee, for themselves, their successors and assigns, hereby agree as follows:

1. **LICENSING.** Upon the terms and conditions hereafter set forth, Licensor hereby licenses to Licensee, and Licensee hereby licenses from Licensor, the right to use the License Premises.

2. **TERM OF LICENSE.** The term of this License (the "Term") shall commence on [redacted], 2000 (the "License Commencement Date") and shall end on the earlier of (a) [redacted], 2001 and (b) the date on which the closing shall occur under that certain Agreement of Sale dated as of June 15, 1999 between Licensor and Calverton Camelot LLC. (in either case, the "Expiration Date") or such earlier date upon which this License shall expire or be canceled or terminated pursuant to any of the conditions or covenants of this License or pursuant to law. Notwithstanding anything to the contrary contained in this License, Licensor shall have the right, exercisable in its sole discretion, to terminate this License effective immediately upon written notice from Licensor to Licensee, if (i) Licensee shall default under or be in breach, of in any of its obligations, representations or warranties hereunder and (ii) such default continues for (x) five days after written notice form Licensor with respect to monetary defaults or (y) thirty days after written notice from Licensor with respect to nonmonetary defaults. If Licensor shall so terminate this License, from and after the termination date neither party hereto shall have any rights or obligations hereunder other than those that, pursuant to the express terms hereof, survive termination of this License; provided that Licensee shall remain liable to Licensor for any default or breach by Licensee that occurred prior to such termination. Furthermore, this License is not, and shall not be construed to be, a lease or a sublease and nothing contained in this License shall be construed as granting to Licensee any interest or right as tenant or subtenant or any other interest or right other than the interest of a Licensee in accordance with the terms and provisions hereof.

Sept. 1
March,

3. **CONDITIONS OF LICENSE PREMISES.** Licensee agrees to accept the License Premises "as is," and Licensor shall have no obligation to perform any work or repairs on behalf of Licensee. Licensee acknowledges that no representations with respect to the condition of the License Premises, or with respect to any improvement or fixtures thereon or attached thereto, have been made to it. Licensee shall be responsible for all start-up costs and expenses and for all costs and expenses associated with the operation of the License Premises, including without limitation, utility usage costs. Invoices will be provided to Licensee monthly and re to be paid within 10 days. Specifically, Licensee must install electric and steam meters and incur other start-up costs, including but not limited to reactivation of sprinklers, including quarterly testing as required by the Riverhead Fire Marshall, and reactivation of bathrooms. Licensee is responsible for connection of building to municipal water upon installation of the mains including design, inspection and key money.

4. **SECURITY DEPOSIT.** Licensee shall deposit with Licensor on the date hereof an amount equal to $5,878 as security for the faithful performance and observation by Licensee of the terms, conditions and provisions of this License. If a default shall occur and be continuing hereunder, Licensor may apply or retain the whole or any part of the security so deposited to the extent necessary to cure such default. Upon termination of this License, Licensor shall return to Licensee such deposit, less any amounts to which Licensor is entitled pursuant to the terms hereof.

5. **LICENSE FEE.** Licensee shall pay to Licensor, in accordance with Section 6 hereof (a) on the date hereof an amount equal to $17,634 and (b) on the first business day of each month commencing with November 1, 2000, an amount equal to $5,878 (all of the amounts to be paid by Licensee hereunder, collectively, the "Fee"). In the event that the Term shall terminate on a day other than the last day of a calendar month or in the event that the Term shall terminate prior to October 31, 2000, Licensor and Licensee shall equitably prorate the amount of the Fee actually paid to Licensor for such period.

   Licensee covenants and agrees that in no event shall Licensee permit any motor Vehicle to (1) enter the Calverton Site other than through the Access Point (as defined below) or (2) park anywhere other than in the parking area depicted on Exhibit A attached here (the "Parking Area"). Licensee shall be solely responsible for keeping the Parking Area free and clear of debris and snow.

6. **PAYMENT.** The Fee and all other charges, costs and expenses payable by Licensee under this License shall be paid by certified check payable to the order of the Town of Riverhead Community Development Agency and delivered to Andrea Lohneiss at the address provided for Licensor in the preamble to this License, without notice or demand therefor (except to the extent otherwise expressly provided herein) and without any deduction, credit, set-off, counterclaim or abatement whatsoever in every case in which Licensee is required to pay Licensor a sum of money and said sum (or any portion thereof) is not Paid when due, interest at an annual rate of 12%

shall be payable on such sum (or so much thereof as shall be unpaid) from the date said sum becomes due until the date the unpaid amount is paid.

7. **USE; COVENANTS.** (a) Licensee shall use the License Premises only for the ~~design and manufacturing of household and commercial cabinets~~ (the "Uses") to prepare the License Premises for the same and to clean and restore the License Premises, in each case, in accordance with, and subject to, the terms and provisions of this License. Licensee shall be responsible for compliance with local zoning and for obtaining all permits necessary to conduct its business.

orage, ocessing, nd anufacturing metal and oncrete roducts

(b) Licensee, at its own cost and expense, shall protect, maintain, and keep in good order, the License Premises.

(c) No additions to, or alterations of, the License Premises shall be made without the prior consent of Licensor or in violation of any applicable building codes. Upon revocation or surrender of this License, to the extent directed by Licensor, Licensee shall remove all alterations, additions, betterments and improvements made, or installed, and restore the License Premises to the same, or as good condition as existed on the date of entry under this License, reasonable wear and tear excepted.

(d) Licensee shall be liable for any loss of, or damage to, the Calverton Site incurred in connection with the Uses and shall make restoration or repair, or monetary compensation as may be directed by Licensor. Licensee shall maintain, at a minimum, the types and amounts of insurance evidenced by the certificates attached hereto as Exhibit B. Licensee agrees that not less than thirty (30) days prior to the expiration of any insurance required by this License, it will deliver to Licensor's local representative a certificate of insurance or a certified copy of each renewal policy to cover the same risks. Each policy of insurance required hereunder shall name Licensor "Town of Riverhead Community Development Agency" and "Grubb & Ellis Management Services, Inc." as additional insureds. In the event that any items or part of the Calverton Site shall require repair, rebuilding or replacement resulting from loss or damage, the risk of which is assumed under this Section 7, Licensee shall promptly give notice thereof to Licensor and shall, upon demand, either compensate Licensor for such loss or damage, or rebuild, replace or repair the item or items of the Calverton Site so lost or damaged, as Licensor may elect. In the event Licensee shall not have been required to effect such repair, rebuilding, or replacement, and the insurance proceeds allocable to the loss or damage that has created the need for such repair, rebuilding or replacement have been paid to Licensee, Licensee shall promptly refund to Licensor the amount of such proceeds.

(e) Without limiting the generality of any other provision of this Agreement, Licensee hereby covenants and agrees that Licensee shall provide ample vehicles, personnel, equipment and containers to clean the License Premises and insure that the same is restored to as good condition, subject to reasonable wear and tear, on the Expiration Date as it was in on the License Commencement Date.

(f) In connection with the performance of work under this License, Licensee agrees not to discriminate against any employee or applicant for employment because race, religion, color or national origin. The aforesaid provision shall include, but not be limited to, the following: employment, upgrading, demotion or transfer; recruitment or recruitment advertising; layoff or termination; rates of pay or other forms of compensation; and selection for training including apprenticeship. Licensee agrees to post hereafter in conspicuous places available for employees and applicants for employment, notices to be provided by Licensor setting forth the provisions of the nondiscrimination clause. Licensee further agrees to insert the foregoing in all subcontracts hereunder, except subcontracts for standard commercial supplies or raw materials.

(g) Licensor shall have the sole authority to determine what entity or entities shall provide the following services to the Calverton Site: any and all telecommunications products and services including but not limited to telephone, intellipath, ISDN, date circuits, satellite communications services, fiber, cable, electric and water. Licensee shall not install or contract for the installation of any of the foregoing services without the express written consent of the Licensor.

8. **ASSIGNMENT AND LICENSING.** Notwithstanding anything to the contrary contained in this License, Licensee shall not assign this License, License the License Premises in whole or in part or permit Licensee's interest in this License to be vested in any party other than Licensee by operation f law or otherwise. A transfer of more than fifty (50%) at any one time or, in the aggregate from time to time, of the stock, partnership or other ownership interests in Licensee, direct or indirectly shall be deemed to be an assignment of this License.

9. **LICENSOR'S REMEDIES.** (a) If Licensee fails to perform any of its obligations hereunder in accordance with the terms hereof, then , after reasonable notice to Licensee not to exceed thirty (30) days, and an opportunity for Licensee to cure such failure, (except in case of emergency) License may (but shall not be obligated to) cure such failure at the expense of Licensee, and the amount incurred by Licensor in connection with such cure shall be payable by Licensee to Licensor on demand.

(b) Except as provided in Section 2 and in the immediately following sentence, in the event of a breach by Licensee hereunder, Licensor shall be limited to an action at law for damages. Notwithstanding the foregoing, in the event that Licensee holds over after the expiration of the Term, (i) Licensee shall be obligated to pay Licensor an amount equal to $750 per diem for each day of the holdover term and (ii) Licensor shall have all of the rights and remedies available to it at law or in equity, including, without limitation, the right to exercise self help and to dispossess Licensee of the License Premises, change the locks on the License Premises, deny Licensee access to the License Premises and take possession of or dispose of any property at the License Premises, all at the cost and expense of Licensee. Except as provided in Section 2, in no event shall Licensor have the right to enjoin Licensee's performance of the Uses.

10. **INDEMNITY.** (a) Licensee shall indemnify and hold Licensor harmless from and against any and all claims, actions, liabilities, losses, damages (including, without limitation, consequential and special damages), costs and expenses (including, without limitation, court costs and reasonable attorneys' fees and expenses) arising from or in connection with (i) the use or occupancy by Licensee of the License Premises during the term hereof, or (ii) any work or thing done or any condition created by or any other act or omission of Licensee or its employees, agents, contractors, visitors or licensees, in the License Premises or any other part of the Calverton Site in connection with Licensee's use of the License Premises, or (iii) Licensee's failure to perform any of the obligations imposed on it hereunder.

    (b) The foregoing indemnity does not include any claims, actions, liabilities, losses, damages, costs and expenses resulting from Licensor's gross negligence or willful misconduct.

11. **Brokers.** Licensee represents that it has not dealt with any broker or finder other than Grubb & Ellis with respect to this License. Licensee agrees to indemnify and hold Licensor harmless from and against any and all loss, liability, damage, cost and expense (including, but not limited to, court cots and reasonable attorneys' fees and expenses) which Licensor may incur or sustain in connection with any claim or action by any broker or finder that may be asserted against Licensor as a result of any conversations, correspondence or other dealings between Licensee and such broker or finder.

12. **NOTICES.** Any notices to be given under this License shall be in writing and shall be sent by registered or certified mail, return receipt requested. If such notice is directed to Licensee, it shall be addressed to Licensee at Island Properties of Suffolk, Inc., PO ------, Southold, NY, Attention: Derrick Doubrava, President, and if such notice is directed to Licensor, it shall be addressed to Licensor at 200 Howell Avenue, Riverhead, New York 11901, Attention: Andrea Lohneiss. Either party may, by notice in writing, direct that future notices be sent to a different address and to the attention of such other people as either Licensor or Licensee shall designate.

Island Properties of Suffolk, Inc., a corporation having an address at: ---------, Southold, NY, Attention:

13. **HAZARDOUS SUBSTANCES.** (a) Generally. Licensee shall not generate, store, manufacture, refine, transport, treat, dispose of, or otherwise permit to be present on or about the License Premises, any Hazardous Substances (other than Hazardous Substances (x) customarily used in events such as the Event and (y) used, stored, transported, and disposed of in strict compliance with applicable law). As used herein, the term "Hazardous Substances" shall mean any flammables, explosives, radioactive materials, hazardous wastes, hazardous and toxic substances or related materials, asbestos or any materials containing asbestos, or any other hazardous or toxic substance or material as defined by any Federal, State or local environmental law, rule or regulation, including, without limitation, the Resource Conservation and Recovery Act of 1976, as amended from time to time, the Comprehensive

Environmental Response, Compensation and Liability Act of 1980, as amended from time to time, the Toxic Substances Control Act, as amended from time to time, the Hazardous Materials Transportation Act, as amended from time to time, and the regulations adopted and the publications promulgated pursuant to each of the foregoing.

b. In addition to the foregoing, (A) Licensee hereby agrees to comply at all times with and to cause the License Premises to be in compliance at all times with the Suffolk County Health Department Regulations and (B) Licensee shall file for a fire prevention permit and hazardous material permit from the Town of Riverhead.

c. Indemnification. Licensee shall indemnify and hold harmless Licensor from and against any and all liabilities, damages, claims, losses, penalties, judgments, causes of action, costs and expenses (including, without limitation, court costs and the reasonable fees and expenses of counsel) which may be incurred by Licensor directly arising out of any breach by Licensee of the obligations imposed upon it under this Section 13. The foregoing indemnity shall survive the expiration or sooner termination of this License.

14. **CROSS-DEFAULT.** To the extent that the Licensor and the Licensee are parties to any other similar agreements, any default under such similar agreements shall be deemed to be a default under this License, and any default under such similar agreements.

15. **MISCELLANEOUS**. (a) Merger. All prior understandings and agreements between the parties with respect to the subject matter hereof are merged within this License, which alone fully and completely sets forth the understanding of the parties with respect to the subject matter hereof. This License may not be changed or terminated orally or in any manner other than by a writing signed by the party against whom enforcement of the change or termination is sought.

(b) Successors and Assigns. This License shall be binding upon and shall inure to the benefit of the parties hereto and their respective successors and permitted assigns. The term "Licensor," as used in this License, shall mean only the owner from time to time of the License Premises, so that in the event of any transfer or assignment of the License Premises, the transferor or assignor shall be and hereby is entirely freed and relieved of all covenants, obligations and liability of Licensor under this License, and it shall be deemed, without further agreement, that the transferee or assignee has assumed and agreed to perform and observe all obligations of Licensor under this License during the period that such transferee or assignee is the owner of the interest of License Premises.

(c) Licensee represents that this License has been duly authorized, executed and delivered by Licensee and is enforceable against Licensee in accordance with its terms.

(d) Neither Licensor nor any tenant, nor other party now or hereafter having an interest in the Calverton Site, shall have any right of action based upon invasion of privacy, publicity, defamation, or other civil rights, in connection with the exercise of the permission and/or rights herein granted. Notwithstanding the foregoing, Licensee shall not use the name "Calverton" or "Riverhead", or any signage containing such names, and shall not use the names, pictures, or likenesses of any officials or employees of the Town of Riverhead in connection with or production of the "use" hereunder without the prior consent of Licensor, which consent shall not be unreasonably withheld or delayed.

LICENSOR:

THE TOWN OF RIVERHEAD COMMUNITY DEVELOPMENT AGENCY

By:_____
Name:
Title:

LICENSEE:

By:_____
Name:
Title:

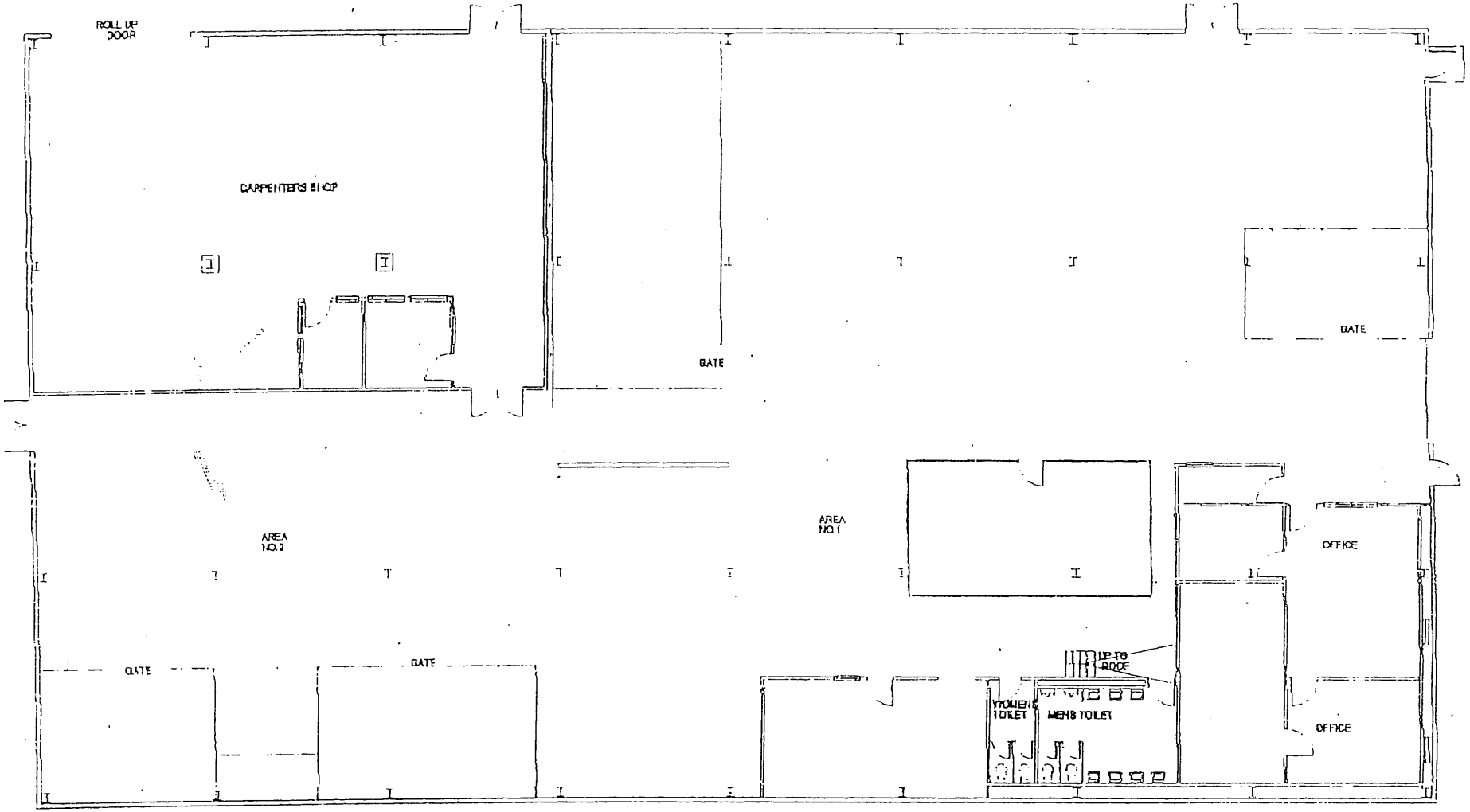
ROLL UP DOOR
CARPENTERS SHOP
GATE
GATE
AREA NO.2
AREA NO.1
OFFICE
GATE
GATE
UP TO ROOF
WOMENS TOILET
MENS TOILET
OFFICE

BLDG 06-013

9/5/00

COMMUNITY DEVELOPMENT AGENCY
RESOLUTION # 25

AUTHORIZES CHAIRMAN TO EXECUTE RUNWAY USE AGREEMENT WITH SKYDIVE LONG ISLAND

COUNCILMAN DENSIESKI offered the following resolution, which was seconded by COUNCILMAN KENT.

WHEREAS, by CDA Resolution #16, adopted July 5, 2000, the CDA authorized the Chairman to execute a License Agreement with Skydive Long Island involving the use of 2184 square feet of Buildings 06-24 and 06-25; and

WHEREAS, Skydive Long Island's proposed operations require use of a runway, said use not being addressed in the building use agreement; and

WHEREAS, the CDA Board desires to permit the use of the 10,000 foot runway by Skydive Long Island according to the terms and conditions described in the attached Runway Use Agreement and Exhibit A; and

WHEREAS, the CDA Board desires to identify a specific "tie down" area as depicted on the attached Exhibit A and a specific "drop zone" not depicted but to be determined following execution of the Runway Use Agreement.

THEREFORE, BE IT RESOLVED, that the CDA hereby authorizes the Chairman to execute a Runway Use Agreement substantially in the form attached hereto.

BE IT FURTHER RESOLVED, that the Town Clerk shall forward a certified copy of this resolution to Dawn Thomas, Town Attorney, and Andrea Lohneiss, CDA Director.

5 yes

RUNWAY USE AGREEMENT

This agreement, made and entered into this _____ day of September, 2000, between the Town of Riverhead Community Development Agency ("CDA") and and Skydive Long Island, a New York corporation with offices at 220 Pleasure Drive, Flanders, NY 11901.

W I T N E S S E T H

WHEREAS, the CDA owns two runways and related facilities located at Enterprise Park in Calverton ("EPCAL"), New York, and

WHEREAS, the CDA has authorized a license agreement permitting Sky Dive Long Island to utilize approximately 2,184 square feet of office space in buildings 6-24 and 06-25 at the EPCAL property which is located within the Town's Planned Industrial Park District, and

WHEREAS, in connection with its license to utilize the aforementioned property, Skydive Long Island wishes to utilize the runways in connection with the operations of its flight school, aircraft maintenance shop and sport parachuting club. All of the aforementioned uses are permitted pursuant to the Town's Zoning, and

NOW, THEREFORE, and in consideration of the mutual convenants and agreements herein contained, CDA does hereby demise and provide to Skydive Long Island and Skydive Long Island does hereby take from CDA the right to utilize certain facilities, rights, services and privileges as follows:

1. Term: The term of this Agreement shall be for a period of six (6) months commencing August 1, 2000 and ending January 31, 2001, at which time this Agreement shall terminate, unless sooner terminated as provided for herein.

2. Premises: CDA hereby grants Skydive Long Island the right to utilize the full length of each runway as is necessary to conduct its business for taxiing, take-offs, landings and aircraft storage. CDA further grants Skydive Long Island the right to utilize the "tie down" area depicted in Exhibit A annexed hereto for the parking of aircraft. Skydive Long Island agrees not to utilize the premises for any purposes, other than the purposes identified herein, unless otherwise authorized, in writing, by the CDA and subject to any other licenses or approvals, governmental or otherwise, that may be required.

3. Skydive Long Island shall also have the right to utilize a "drop zone", consisting of approximately 5 acres to be determined by the Town Board following the execution of this agreement, as a landing location for parachuters dropped over the licensed premises. The CDA may change the location of the drop zone upon 30 days written notice to Skydive Long Island.

4. Permitted Aircraft: Skydive Long Island agrees that it shall utilize only the aircraft listed on Exhibit A hereto without prior express written permission from the CDA

5. License Fee: The License fee for the utilization of the runway and taxiways shall be Five Hundred ($500.00) Dollars per month and the License fee for the utilization of the tie down facilities and the drop zone shall be One Thousand Five Hundred ($1, 500.00) Dollars per month due and payable on the first of each and every month.

6. Ingress and Egress: Subject to any applicable rules and regulations governing the use of the runway, CDA grants Skydive Long Island the right the full free and unrestricted right of ingress and egress in common with others having such right.

7. Signs and Advertising: No signs shall be placed at the premises, other than on the building licensed to be used by Skydive Long Island pursuant to the license agreement between Skydive Long Island and the CDA, without first obtaining permission from the CDA and the necessary permits from the Town of Riverhead.

8. Condition of the Facilities: Skydive Long Island has examined the subject runway and tie down area listed as Exhibit A hereto. Skydive Long Island is fully familiar with the condition of the runway and its related facilities and agrees to accept the runway and its related facilities, including, but not limited to runway lighting and painting, in "as is" condition. Excel further agrees to maintain the runway and taxiway in a safe and usable condition, free of debris and other foreign objects.

9. Wildlife. Skydive Long Island is fully aware of the existence of the large numbers of wildlife, including, but not limited to geese and deer, that freely traverse the runway, taxiways and adjacent areas on the subject property. Skydive Long Island acknowledges that the existence of the wildlife poses a potential hazard to aircraft utilizing the runway. Nothwithstanding the foregoing, Skydive Long Island agrees that it is responsible for ensuring that any wildlife is cleared from runway, taxiways, and adjacent areas as is necessary to enable it to conduct its business as set forth herein. Skydive Long Island further agrees that it

shall indemnify and hold the Town harmless from any liabililty arising from the existence of wildlife on the runways as described herein.

10. Skydive Long Island hereby acknowledges that the airport is currently unattended and that the CDA does not carry out any of the maintenance or operational functions at the airport. Skydive acknowledges that neither the Town, nor the CDA has no responsibility for the existing condition of the facilities and further agrees that the neither the Town, nor the CDA shall not be required to maintain or operate the airport.

11. Skydive Long Island hereby releases, holds harmless and indemnifies the CDA and the Town of Riverhead from any liability arising in connection with the use of the runway, taxiways and related facilities, as set forth in this agreement.

12. Assignment. Skydive Long Island may not assign, transfer or sub-lease the whole, or any part of this agreement, or the subject properties. Nor will Skydive Long Island allow the use of its rights and privileges granted hereunder, by any entity, without the prior written permission of the CDA.

13. Successors and Assigns: All the covenants, stipulations and agreements herein shall extend to and bind the legal representatives, successors and assigns of the respective parties hereto.

14. Indemnity and Insurance: Skydive Long Island shall protect, defend and hold the CDA and the Town of Riverhead completely harmless from and against any and all liabilities, losses, suits, claims, judgments, fines or demands arising by reason of injury or death of any person, or damage to any property, including all reasonable costs for investigation and defense thereof (including, but not limited to, attorneys fees, court costs, and expert fees), of any nature whatsoever arising out of or incident to this Agreement and/or the use or occupancy of the premises or the acts or omissions of Lessee's officers, agents, employees, contractors, subcontractors, licensees or invitees, regardless of where the injury, death or damage is cause by the sole negligence of the CDA or the Town of Riverhead in carrying out its obligations hereunder. The provision of this section shall survive the expiration or early termination of this Agreement.

15. Skydive Long Island further agrees to carry public liability and automobile liability insurance in an amount not less than $1,000,000.00 combined single limit covering bodily injury and property damage per occurrence in a company(ies) acceptable to the CDA and the Town of Riverhead, in which policy the CDA and the Town of Riverhead shall be

named as additional insureds. Skydive Long Island shall furnish satisfactory evidence that such insurance is in effect and will not be canceled during the term of this Agreement without thirty (30) days prior written notice of such cancellation to Authority.

16. This agreement shall terminate immediately, and without notice to Skydive Long Island, Inc. in the event of the termination of the License Agreement between the Town of Riverhead CDA and Skydive Long Island, Inc., dated September 2000, concerning the use of buildings 06-24 and –6-25 at the Calverton Site.

17. This agreement incorporates by reference the language contained in the license agreement between the parties dated September , 2000 concerning the use of buildings 06-24 and 06-25 at the Calverton Site.

IN WITNESS WHEREOF, the parties hereto do hereby execute this License as of the date and year first above written.

Town of Riverhead	Skydive Long Island
By: Robert F. Kozakiewicz	By:

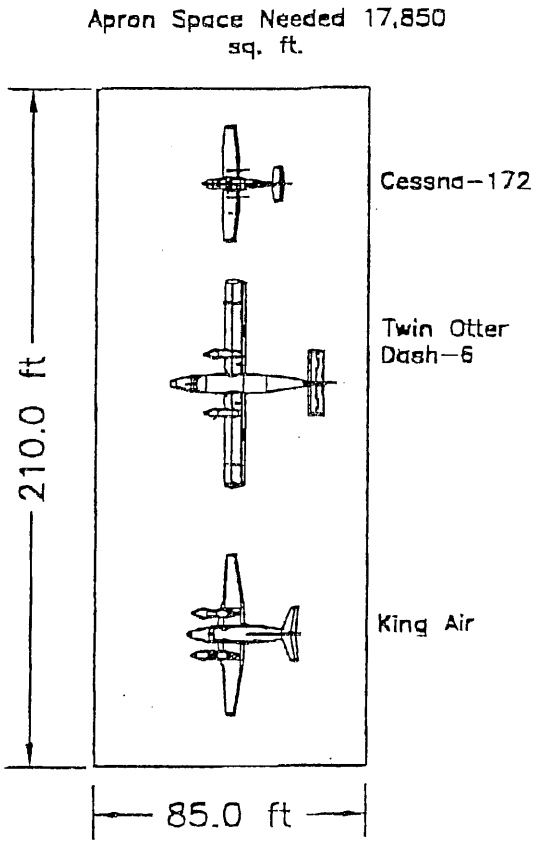

Scale 1" = 60'

APRON LAYOUT
Configuration B

7/5/00

Town of Riverhead Community Development Agency

Resolution # 16

Authorizes Chairman to Execute License Agreement with Skydive Long Island

Member Lull offered the following resolution,

which was seconded by Member Kent:

WHEREAS, Skydive has requested a license agreement for 2,184 square feet of Buildings 06-24 and 06-25 beginning August 1, 2000 for up to six months; and

WHEREAS, the CDA will realize net income of $825 per month for 2,184 square feet of Buildings 06-24 and 06-25 during the license period, subject to future agreement regarding the runways, tie down area, drop zones, maintenance and other aviation-related costs.

THEREFORE, BE IT RESOLVED, that the CDA hereby authorizes the Chairman to execute the license agreement substantially in the form attached hereto.

AND BE IT FURTHER RESOLVED, that the Town Clerk shall provide a certified copy of this resolution to Community Development Agency Director Andrea Lohneiss.

The Vote:

Member Densieski	YES	
Member Cardinale	YES	
Member Kent	YES	
Member Lull	YES	**The Resolution is ADOPTED.**
Chairman Kozakiewicz	YES	

State of New York)
County of Suffolk) ss:
Town of Riverhead

THIS IS TO CERTIFY that I, the undersigned, Secretary/Treasurer of the Riverhead Community Development Agency, Town of Riverhead, County of Suffolk, have compared the foregoing copy with the original now on file in this office and which was duly filed on the 27th day of July 2000, and that the same is a true and correct transcript of said and of the whole thereof.

IN WITNESS WHEREOF, I have hereunto set my hand and the official seal of the said Riverhead Community Development Agency, this 27th day of July 2000.

Andrea Lohneiss

Secretary/Treasurer of the Community Development Agency